innoSCAN II - 20

Features

- High precision
- Compact construction
- Sealed housing
- Competitive price
- Performance improvement

TECHNICAL SPECIFICATIONS

Input Aperture	20 mm
Wavelength	355, 532, 1064, 10600 nm
Tracking error time	0.32 ms
Writing Speed[1] [2]	> 320 cps
Positioning Speed[1]	> 5 m/s
Typical Deflection	± 0.35 rad
Resolution	16 bit
Repeatability (RMS)	< 20 µrad
Max. Gaindrift[3]	100 ppm/K
Max. Offsetdrift[3]	50 µrad/K

[1] with F-theta-lens, f = 160 mm
[2] Single-stroke font, 1 mm height

Long-Term Drift (8h)[3]	< 0,3 mrad
Zero Offset	< 6 mrad
Digital Interface	XY2-100 Protocol
Analog Interface	±5V
Ambient Temperature	+15 to +35 °C
Storage Temperature	-20 to +60 °C
Humidity	≤ 80% Non-condensing
Voltage / Current	15 V ± DC / max. 3A
Weight	ca. 4.2 kg
Dimensions L x W x H	166 x 120 x 148 mm

[3] Drift per axis
[4] After warming-up

Innotech Laser GmbH

Giesenheide 31
40724 Hilden
Germany

Tel: +49 (0) 2103 30989-00
Fax: +49 (0) 2103 30989-88
www.innotech-laser.de
info@innotech-laser.de

innoSCAN II - 20

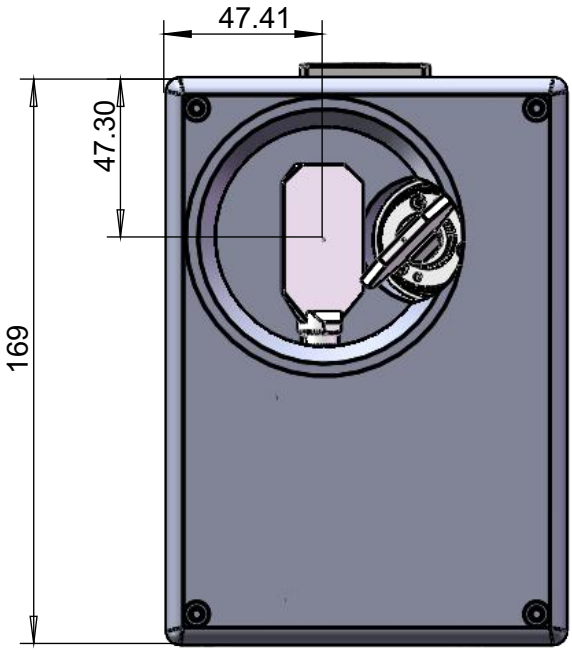

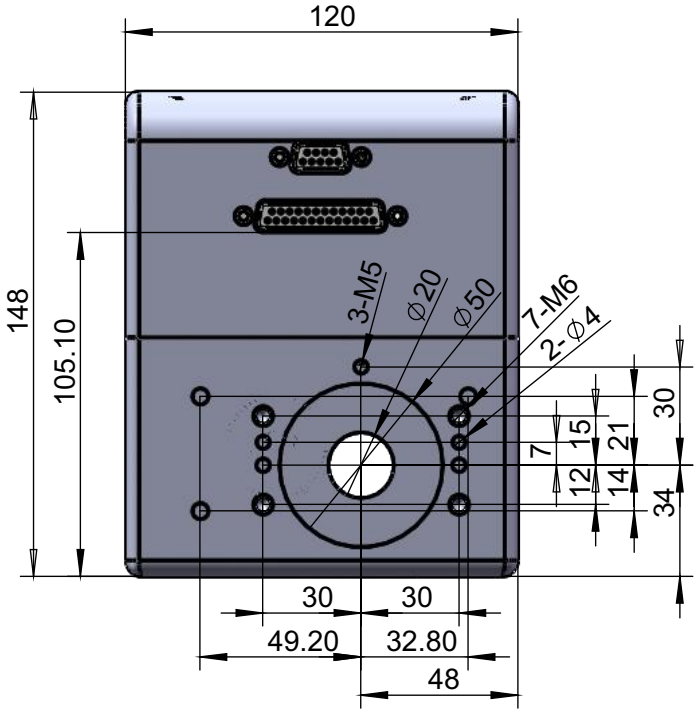

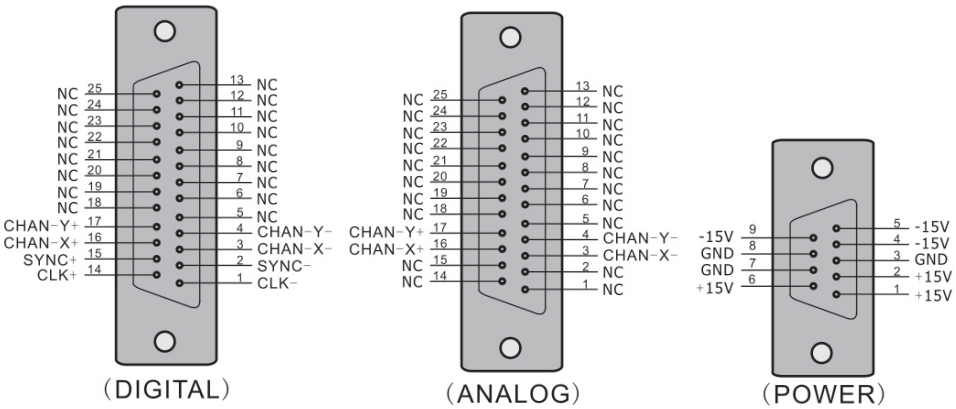

Innotech Laser GmbH

Giesenheide 31
40724 Hilden
Germany

Tel: +49 (0) 2103 30989-00
Fax: +49 (0) 2103 30989-88
www.innotech-laser.de
info@innotech-laser.de