Innotech Laser GmbH
Talstr.55
D-42697 Solingen
Germany

Tel:+49(0)212 642 319 90
Fax:+49(0)212 642 319 94

E-Mail:info@innotech-laser.de
www.innotech-laser.de

F-Theta Lens

Wavelength 532nm

Item No.	Focal Length (mm)	Back Working (mm)	Wavelength (nm)	Scan Field (mm)	Scan Angle	Entrance Diameter (mm)	Focus Size (µm)	Mirror Distances m1 / m2 (mm)	Thread
SH-532-70-100-12	100	114	532	70x70	±28º	12	10	16/10	M85X1
SH-532-110-160-12	160	180	532	100x100	±28º	12	13	16/10	M85X1
SH-532-140-210-12	210	232,5	532	140x140	±28º	12	21	16/10	M85X1
SH-532-175-254-12	254	287	532	175x175	±28º	12	25	16/10	M85X1
SH-532-230-330-12	330	355	532	230x230	±28º	12	23	16/10	M85X1
SH-532-350-500-12	500	539	532	350x350	±28º	12	41	16/10	M85X1

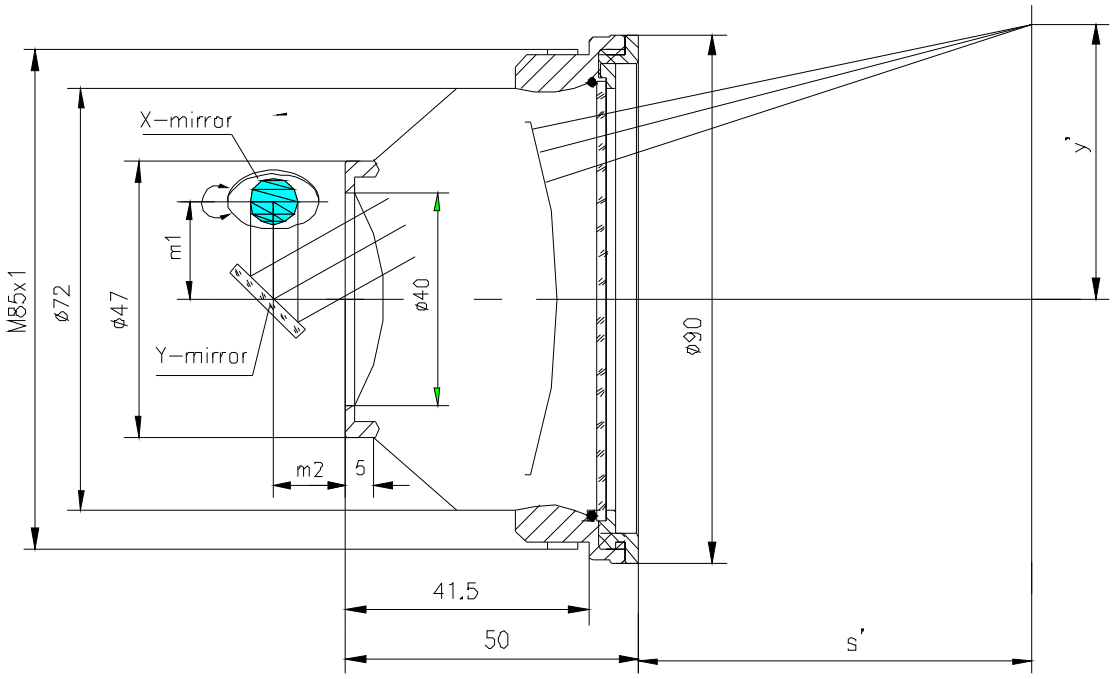

m1=16-20, m2=12-16