Innotech Laser GmbH
Talstr.55
D-42697 Solingen
Germany

Tel:+49(0)212 642 319 90
Fax:+49(0)212 642 319 94

E-Mail:info@innotech-laser.de
www.innotech-laser.de

F-Theta Lens

Wavelength 355nm

Item No.	Focal Length (mm)	Back Working (mm)	Wavelength (nm)	Scan Field (mm)	Scan Angle	Entrance Diameter (mm)	Focus Size (µm)	Mirror Distances m1 / m2 (mm)	Thread
SH-355-70-100-7	100	136	355	70x70	±25º	7	10	16/10	M85X1
SH-355-100-160-8	160	200	355	100x100	±25º	8	15	16/10	M85X1
SH-355-140-210-8	210	252	355	140x140	±25º	8	17	16/10	M85X1
SH-355-175-254-8	254	309	355	175x175	±25º	8	24	12/10	M85X1
SH-355-220-330-8	330	355	355	220x220	±25º	8	30	16/10	M85X1
SH-355-300-420-8	420	475	355	300x300	±28º	8	38	16/10	M85X1
SH-355-400-650-8	650	710	355	400x400	±28º	8	62	12/12	M85X1
SH-355-550-750-8	750	833	355	550x550	±28º	8	74	12/12	M85X1

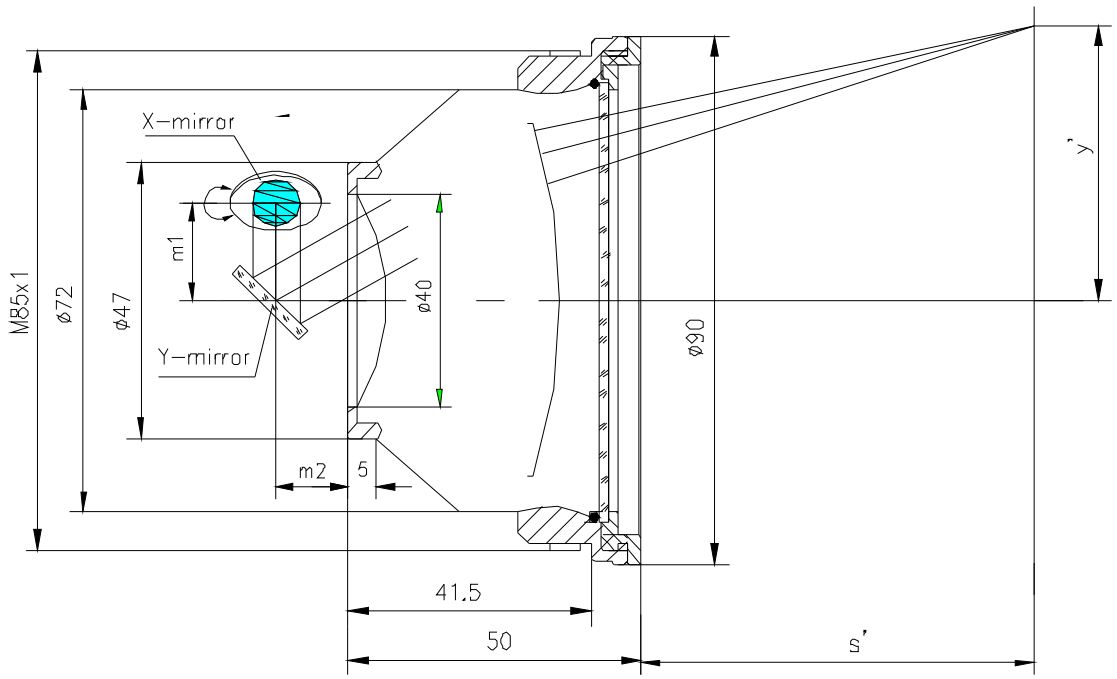

m1=16-20, m2=12-16